ENGLISH

Battery Switch - manual

Rev 04 - 09/2026

This manual is also available in HTML5.

Table of Contents

1. Introduction **1**
1.1. Features 1
1.2. System examples 1

2. Installation **3**
2.1. What's in the box 3
2.2. Mounting 3
2.3. Label sticker 4
2.4. Wiring 4

3. Operation **5**
3.1. Battery Switch knob removal 5

4. Technical specifications **6**
4.1. Enclosure dimensions 6

1. Introduction

The Battery Switch ON/OFF 275A is suitable for battery systems up to 48V.

It has an unique ergonomic and aesthetic knob design. The knob is removable for isolation or safety purposes.

The Battery Switch can be either surface or panel mounted, providing flexibility during install.

The Battery Switch meets the ISO8846 Ignition Protection standard and is suitable for use in an engine room.

1.1. Features

1. Interchangeable label stickers
2. Glass fibre reinforced nylon enclosure
3. Removable cable access window on all 4 sides
4. Removable ergonomic knob

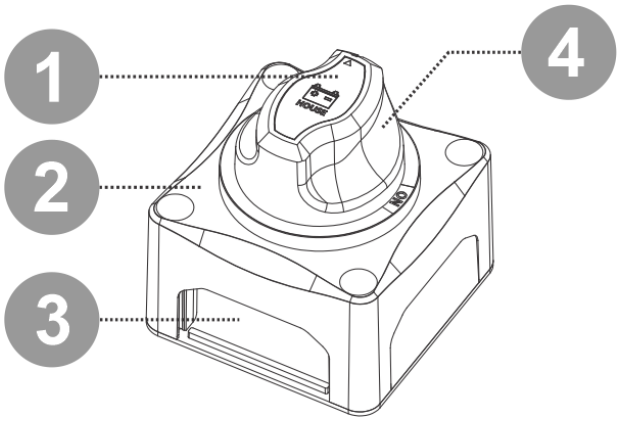

Battery switch features

1.2. System examples

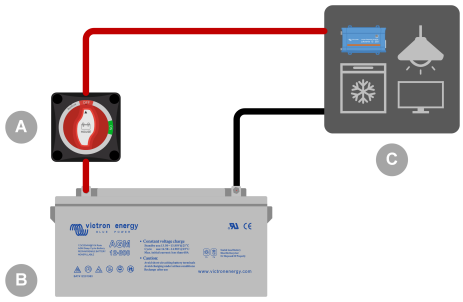

Battery Switch used to disconnect the house system from the house battery. Use to preserve battery charge, system maintenance or in an emergency.

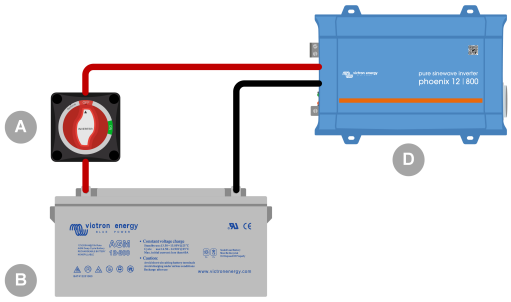

Battery Switch used to disconnect an inverter from the house battery. Use to preserve battery charge, system maintenance or in an emergency.

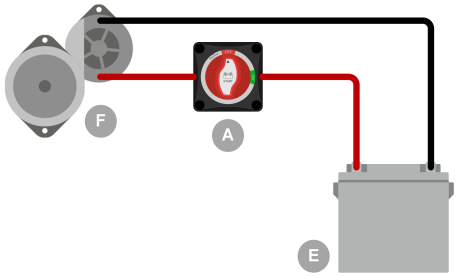

Battery Switch used to disconnect alternator from the starter battery. Use to preserve battery charge, system maintenance or in an emergency.

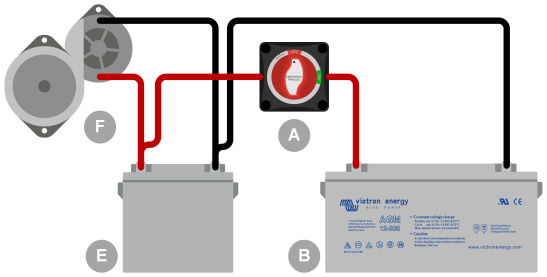

Battery Switch used to parallel connect the house battery to the starter battery. Use in case of an emergency, like a flat starter battery or a flat house battery.

ID	Legend
A	Battery Switch
B	House battery
C	House system DC loads and/or chargers
D	Inverter
E	Starter battery
F	Engine and alternator

2. Installation

2.1. What's in the box

The Battery Switch ships together with the following items:

- Battery Switch
- Instruction booklet with mounting template
- Interchangeable label sticker sheet
- 4 mounting screws

2.2. Mounting

The Battery Switch can be mounted in two ways:

1. Surface mount
2. Rear panel mount

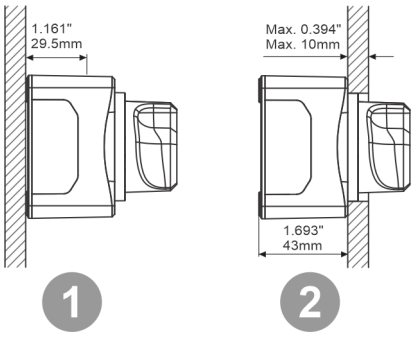

Two different mounting ways.

The battery switch packaging contains a actual size cutout. Use this to mark the screw holes and in case of rear panel mount to mark the hole for the knob. For the dimensions of the Battery Switch see the Enclosure dimensions [6] chapter.

1. Screw holes. 4 holes, one on each corner.
2. Mounting hole for rear panel mounting.

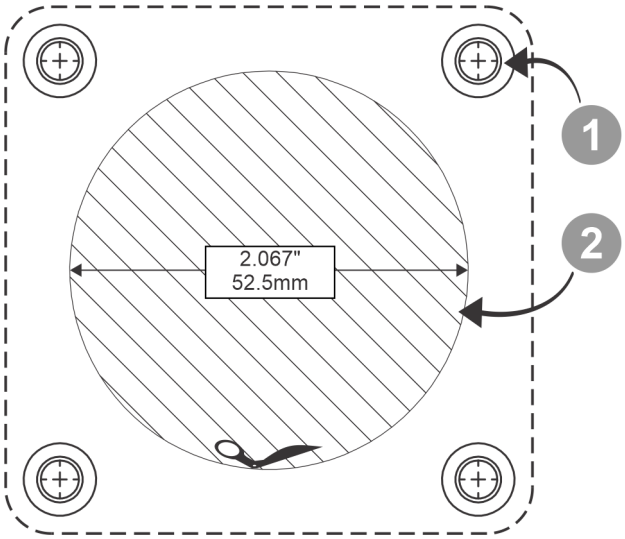

Mounting hole template. Not to scale, use the cutout from the Battery Switch packaging.

2.3. Label sticker

The Battery Switch ships with a sticker sheet containing 16 different label stickers.

- Select the sticker that best corresponds with the circuit the Battery Switch is used in.
- Remove the sticker from the sticker sheet and place it on the knob of the Battery Switch as indicated in below image.

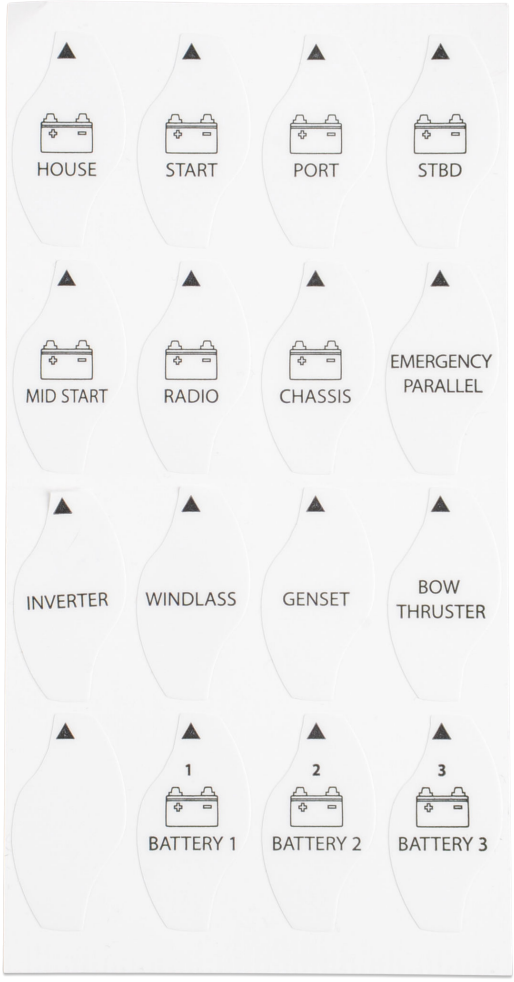

Label sticker sheet

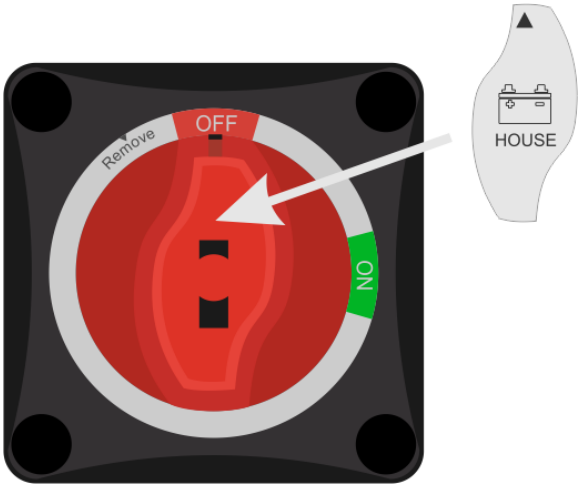

Affixing label sticker

2.4. Wiring

Wire the Battery Switch into the electrical system as follows:

- Disconnect the positive battery terminal.
- Mount the Battery Switch onto the desired surface (surface mount) or panel (rear panel mount).
- Remove the appropriate side-plate for cable access. Do not remove the side-plate facing upward as water may get in from the top.
- Use 120mm² (4/0 AWG) cables on all terminals to meet the Battery Switch current rating.
- Connect one terminal to the positive battery cable. Connect the other terminal to the positive cable of an alternator, load circuit or second battery (depending on installation type).
- Make sure that all nuts and locker washers are properly attached and the nut is tightened with a recommended torque of 8Nm (maximum 12.5Nm).
- Reconnect the positive battery terminal.

3. Operation

1. Twist the knob clockwise to turn the switch on.
2. Turn the knob counter clockwise to turn switch off.
3. Turn the knob a further 30° counter clockwise to turn switch off and to remove the knob.

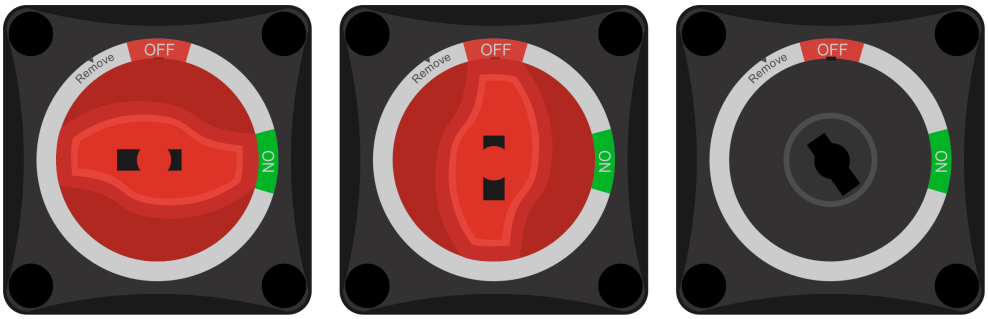

The three switch positions: ON, OFF and Remove

3.1. Battery Switch knob removal

The knob of the Battery Switch can be removed. Use this feature to prevent unwanted operation of the switch. When the knob is removed, the switch is off.

Removal of the knob will prevent accidental switching, for example when system maintenance is carried out (safety), or when the system is left unattended for a certain time (battery discharge prevention).

To remove the knob

1. Ensure that engines and equipment connected to the same DC circuit as the Battery Switch are turned off.

2. Turn the Battery Switch knob counter clockwise to the "OFF" position has been reached.

3. Turn the knob a further 30° counter clockwise until the "Remove" position has been reached

4. Pull the knob away from the Battery Switch.

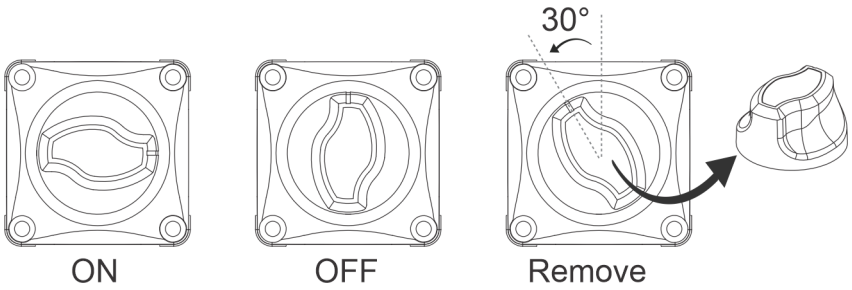

Removal of the Battery Switch knob.

4. Technical specifications

Technical specification	Rating
Continuous DC current rating*	275A
5 minute DC current rating	455A
Peak DC current (cranking) rating	1250A (10 sec)
Maximum DC operating voltage	60V
Terminal material	Tin-plated copper
Hex nut material	Tin-plated copper
Terminals	M10 (3/8 inch / 9.53mm)
Recommended torque	70 lbf·inch (8N.m)
Base material	Glass fiber reinforced nylon
Weight	0.4lb (0.2kg)
Dimensions (l x w x h)	2.71 x 2.71 x 2.87 inch (69 x 69 x 73 mm)
Ignition protection	ISO8846 / SAE J1171

Stop the engine and switch off all loads and charge sources before turning the switch off or on.

The switch is not rated for making or breaking current. Operating it under load causes arcing, which damages the contacts and can weld them closed. Disconnecting the battery while the alternator is charging can damage the alternator diodes.

4.1. Enclosure dimensions

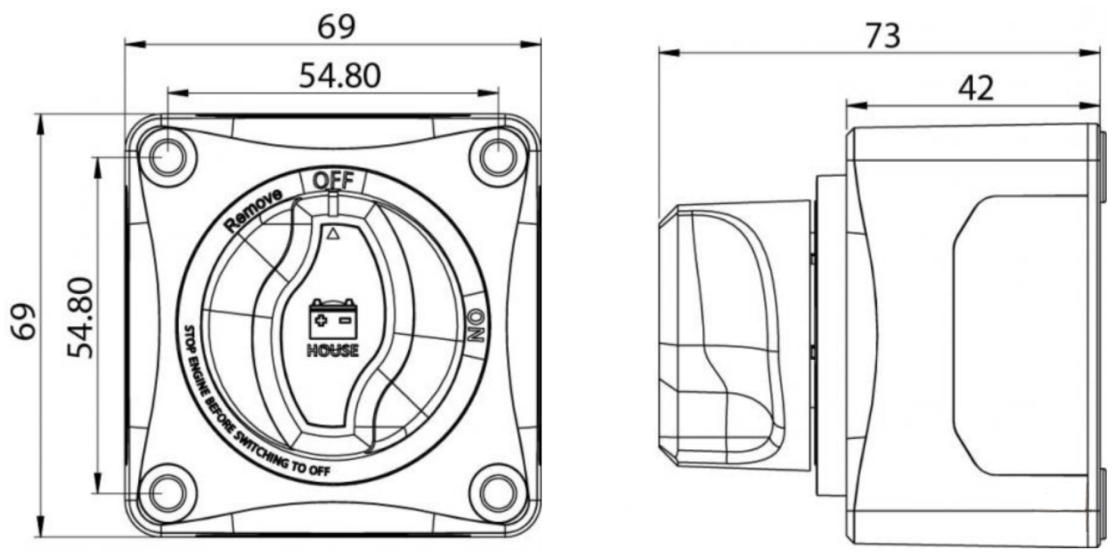

Dimension drawing
VBS127010010 - Battery switch ON/OFF 275A
All measures in mm